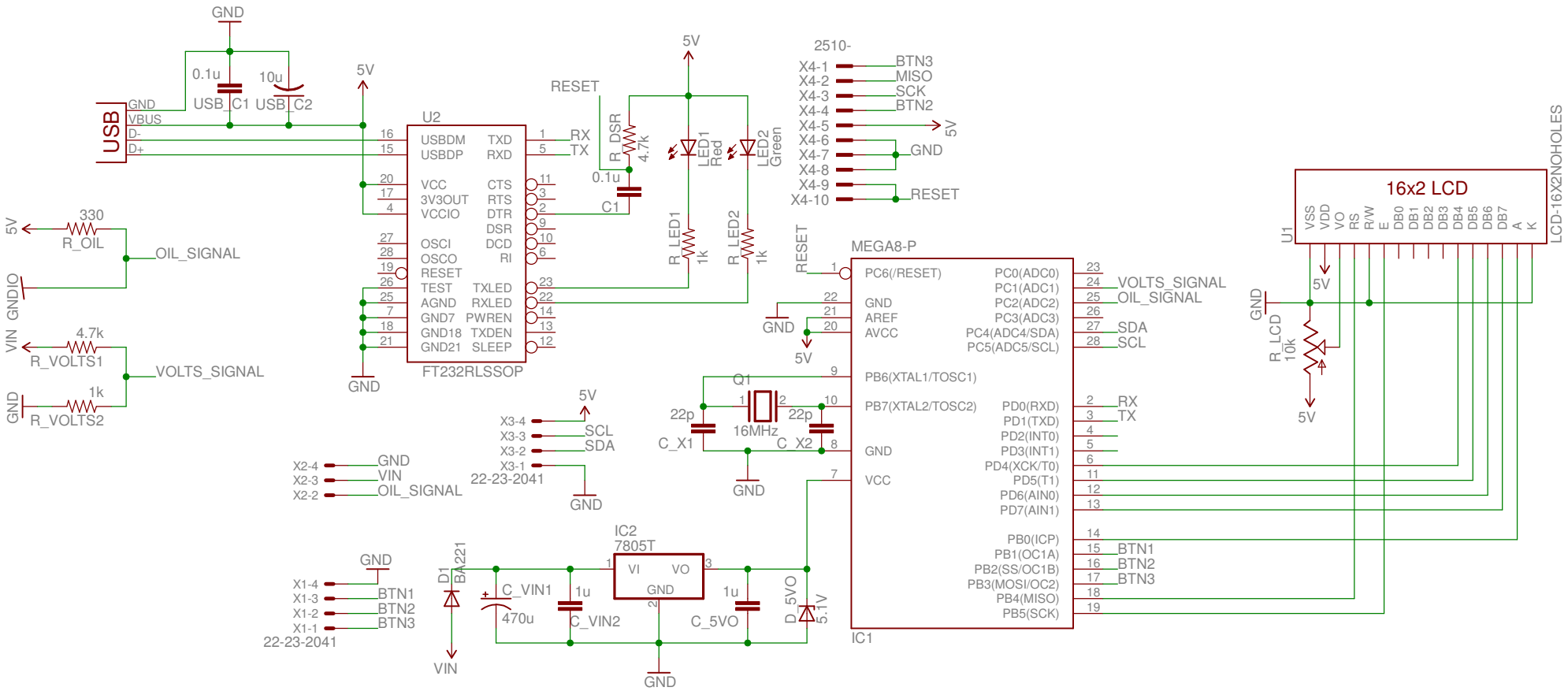
USB
GND
VBUS
D-
D+
0.1u
USB_C1
10u
USB_C2
5V
U2
USBDM
USBDP
VCC
3V3OUT
VCCIO
OSCI
OSCO
RESET
TEST
AGND
GND7
GND18
GND21
TXD
RXD
CTS
RTS
DTR
DSR
DCD
RI
TXLED
RXLED
PWREN
TXDEN
SLEEP
FT232RLSSOP
RX
TX
RESET
R_DSR
4.7k
0.1u
C1
LED1
Red
LED2
Green
R_LED1
1k
R_LED2
1k
2510-
X4-1
X4-2
X4-3
X4-4
X4-5
X4-6
X4-7
X4-8
X4-9
X4-10
BTN3
MISO
SCK
BTN2
GND
RESET
330
R_OIL
OIL_SIGNAL
GNDIO
VIN
4.7k
R_VOLTS1
VOLTS_SIGNAL
1k
R_VOLTS2
MEGA8-P
PC6(/RESET)
GND
AREF
AVCC
PB6(XTAL1/TOSC1)
PB7(XTAL2/TOSC2)
GND
VCC
PC0(ADC0)
PC1(ADC1)
PC2(ADC2)
PC3(ADC3)
PC4(ADC4/SDA)
PC5(ADC5/SCL)
PD0(RXD)
PD1(TXD)
PD2(INT0)
PD3(INT1)
PD4(XCK/T0)
PD5(T1)
PD6(AIN0)
PD7(AIN1)
PB0(ICP)
PB1(OC1A)
PB2(SS/OC1B)
PB3(MOSI/OC2)
PB4(MISO)
PB5(SCK)
IC1
Q1
16MHz
22p
C_X1
22p
C_X2
X3-4
X3-3
X3-2
X3-1
SCL
SDA
22-23-2041
X2-4
X2-3
X2-2
GND
VIN
OIL_SIGNAL
X1-4
X1-3
X1-2
X1-1
BTN1
BTN2
BTN3
22-23-2041
D1
BA221
VIN
C_VIN1
470u
1u
C_VIN2
IC2
7805T
VI
VO
GND
1u
C_5VO
D_5VO
5.1V
16x2 LCD
U1
VSS
VDD
VO
RS
R/W
E
DB0
DB1
DB2
DB3
DB4
DB5
DB6
DB7
A
K
LCD-16X2NOHOLES
R_LCD
10k
VOLTS_SIGNAL
OIL_SIGNAL
SDA
SCL
RX
TX
BTN1
BTN2
BTN3